19” IP65 Outdoor Cabinets

19” IP65 Outdoor Cabinet

W=600 mm D= 650/800 mm 19" IP65 Outdoor Cabinets

- IP65 Industrial Enclosures for IT-Systems
- Type: Free Standing IP65
- Produced in 2 depth variants
  Width x Depth: W600 x D650 (mm)
  Width x Depth: W600 x D800 (mm)
- Total 7 Height options 09U, 12U, 16U, 20U, 22U, 24U, 26U

Based on the application areas, the corrosive agents, humidity effects, salty environmental effects in seaports Lande OD series enclosures constructed from different corrosive resistance reaction level materials.

Can be AISI 304, 316L, 430 Grade stainless steel or alternatively there is an economical Solution where a lower grade of corrosion resistance is provided, the same enclosure is offered hot dip pre-galvanized DX51 D+275gr/m² zinc plated, please define your material indications on the part numbers.

- Double layer structure
- Insulation material between external and internal layers
- RAL7035 polyester outdoor type paint
- Anti-graffiti and insul-paint applicable with RAL 9003 Signal White Polyurethane finish, optionally offered
- IP65 Protection Level (EN60529) covers indicatively
- Nema-250 classifications 3, 3S, 4, 4X, 5,12,12K,13
- Polyurethane infused sealing system for IP level

19” IP65 Outdoor Cabinet

Width: 600 mm
Depth: 650 mm

Load Capacity: 500 kgs.

U Height: 9U, 12U, 16U, 20U, 22U, 24U, 26U

Standards and Compliances:

ISO 9001
Quality Management System

EN 61587-1
Mechanical Structures for
Electronic Equipment

EN IEC 297-1, 19” Mounting
EN IEC 297-2 Overall Cabinet
Dimensions

EN/IEC 60529- IP65 Ingress Protection
performance

EN/IEC 62262- IK10 Mechanical Impact
Resistance

EIA/ ECA-310 (D/E) 19" 482,6 mm
and U 44,45 mm Height Sizing

CE conform to
EN 60950-1
Information Technology
Equipment, Safety,
Part-1: General Requirement

EN IEC 62368-1 Audio/Video, Information
and Communication Technology
Equipment
Part 1: Safety requirements

UL listed to
UL 2416, Outline of Investigation for
Audio/Video, Information and
Communication Technology Equipment
Cabinet, Enclosure and Rack
Systems; UL 60950-1 and CSA C22.2
NO. 60950-1-07, Information Technology
Equipment Safety
Part 1: General Requirements

Environment Friendly;
ISO 14001 Environmental
Management System
RoHS compliancy
%100 Recyclable Material

Standard Color:

RAL 7035 Light Grey

Optional Color:

RAL 9003 Signal White
Antigrafiti and Insulpaint

19” IP65 Outdoor Cabinet

Width: 600 mm
Depth: 650 mm

Construction details:

Front side has inner door, which is lockable provides additional security and additional protection especially for dust entry once main door is not locked.

The cabinet can be equipped with mechanical or magnet door sensors on demand.

The inner skin has wingnut installed (can be opened by hand no tools required) ventilation channel and replaceable filter location.

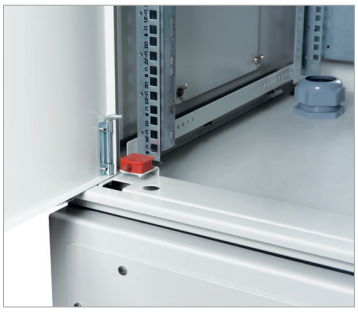

Bottom case has multiple access with 2xPG21, 1xPG48 integrated cable entry pats, 2 pcs 28 mm diameter PVC Blind cap. As an option can be replaced with PG21 cable entry pats. After insertion of the cables to the enclosure, recommended to close the openings with foam or isolation material. In addition all IP65 cabinets are delivered with a plain metal cable entry panel which means if shipping configuration cable entry pats are not suitable for your project any punching can be done on the spare cable entry plain panel.

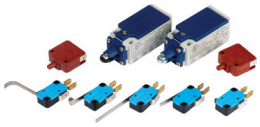

The cabinet is equipped with hinged canopy roof which also has a hinged mechanism keeps canopy open during installation and maintenance period. The canopy is gasketed for EN 60529 protection purposes for the fan module allowing

Fans to discharge the hot air from enclosure via hidden ventilation louvers while still providing EN 60529 IP65 protection to the enclosure Front and rear side of the plinth has a screwed metal panel allowing access during installation and maintenance to plinth concrete basement fixings and access to routed cables to the cabinet.

19” IP65 Outdoor Cabinet

Width: 600 mm
Depth: 650 mm

Construction Drawings

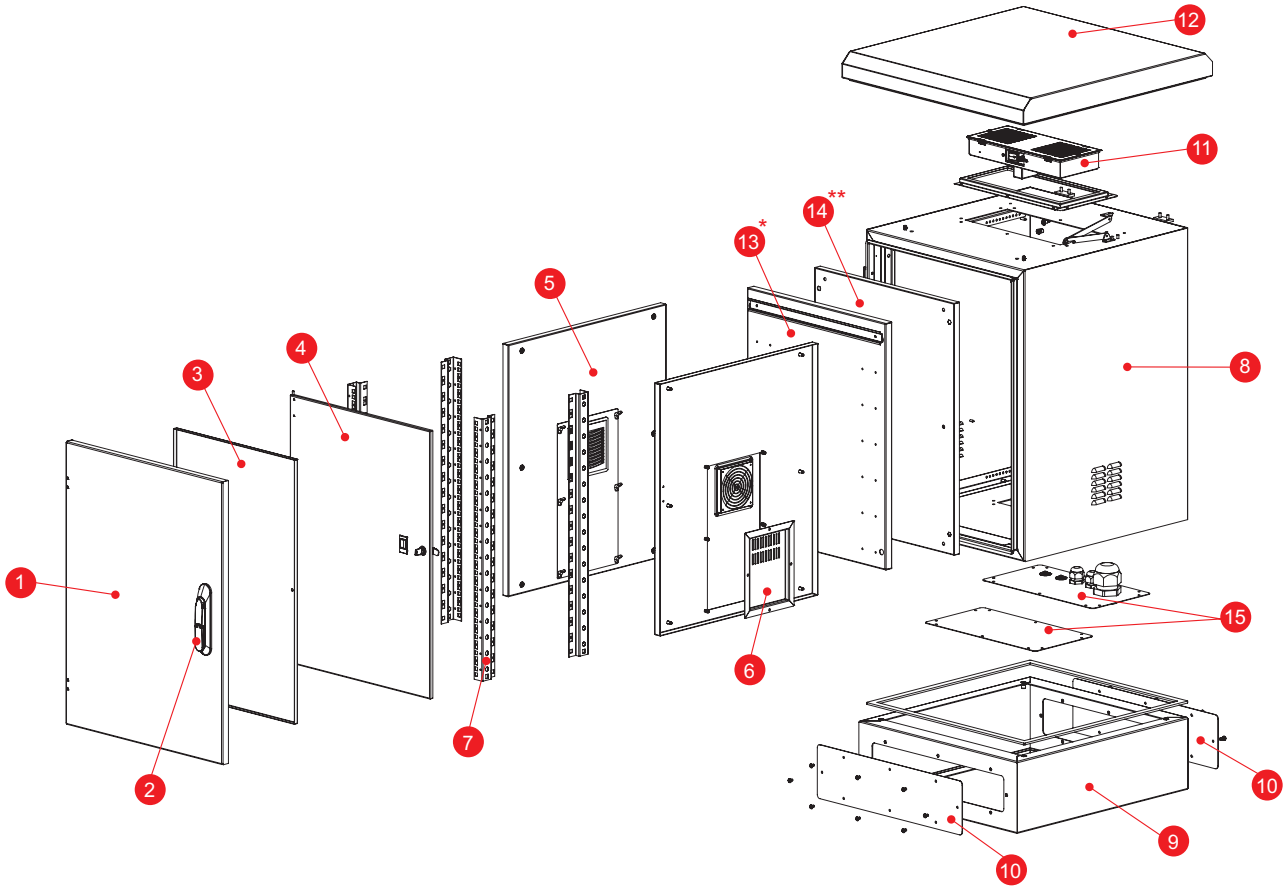

NO	DEFIN		ZN	t:mm
			MATERIAL ZN 275 gr/m²	THICKNESS (mm)
1	FRONT DOOR EXTERNAL SKIN	1	DX51 D + Z275gr/m²	2
2	LOCKING SYSTEM 3 POINT WK2 Antivandalism Certified *** 9U height has single point lock.	1	ABS Fixing Points-Galvanized Mild Steel Locking Rods	-
3	FRONT DOOR INNER SKIN	1	DX51 D + Z275gr/m²	1
4	INTERNAL COVER / DOOR	1	DX51 D + Z275gr/m²	1,5
5	SIDE INNER SKIN	2	DX51 D + Z275gr/m²	1
6	VENTILATION CHANNEL	2	DX51 D + Z275gr/m²	1
7	MOUNTING RAILS 19"	4	DC01-6112 Zinc Plated	1,5
8	MAIN BODY WELDED	1	DX51 D + Z275gr/m²	2
9	PLINTH H200 mm	1	DX51 D + Z275gr/m²	2
10	PLINTH ACCESS WINDOW	1	DX51 D + Z275gr/m²	1,5
11	FAN UNIT HOUSING	1	DC01-6112 Standard Painted	1
12	ROOF CANOPY- 2 INCLINED INNER FIXING SCREWS- 2 HINGES and CANOPY STOPPER MECHANISM	1	DX51 D + Z275gr/m²	1,5
13	*REAR MOUNTING PLATE with DIN RAIL	1	DX51 D + Z275gr/m²	1,5
14	** REAR INNER SKIN	1	DX51 D + Z275gr/m²	1
15	GLAND PLATE WITH PG GLANDS	1	DX51 D + Z275gr/m²	1,5
	GLAND PLATE PLAIN	1		

* The cabinet has a mounting plate equipped with a factory installed DIN rail, position of DIN rail can be changed.
The mounting plate can be installed outside and finally can be mounted on the cabinet after testings are completed, this would be ease your installation works.
** The cabinet has also a rear inner skin which can be used as a mounting plate, incase you will install the componets on the mounting plate inside rack, that moment you can use our inner skin as a mounting plate. This would give extra 20 mm depth clearance inside cabinet for you.

19” IP65 Outdoor Cabinet

Width: 600 mm
Depth: 650 mm

Construction Drawings

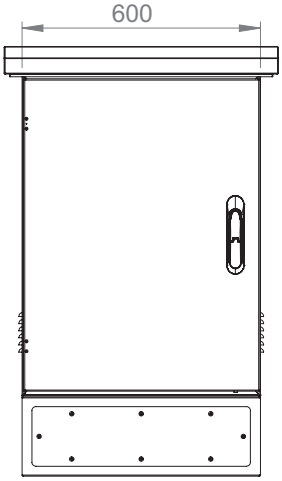

Front view

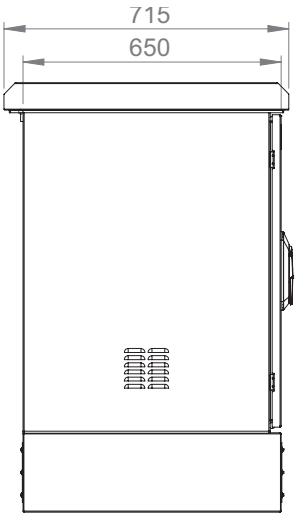

Side view

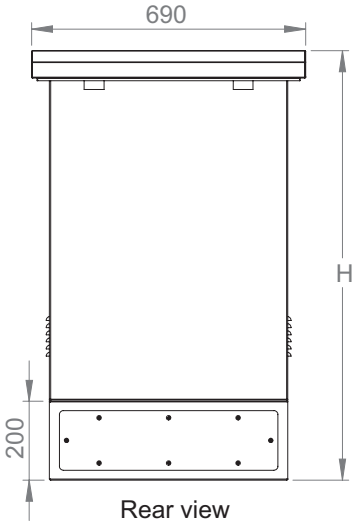

Rear view

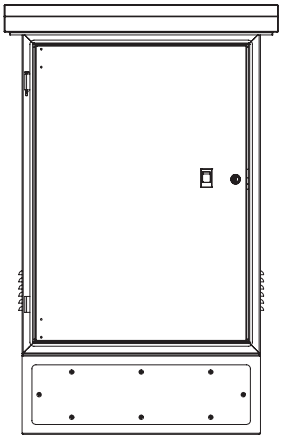

Front inside view

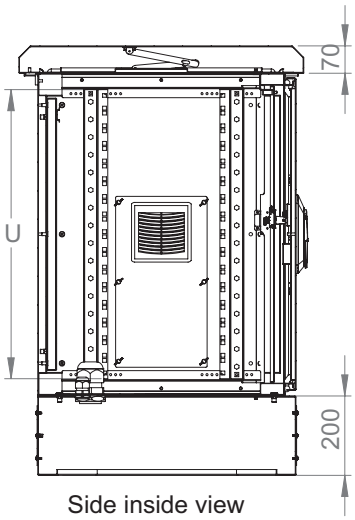

Side inside view

U	H
9U	769 mm
12U	902 mm
16U	1080 mm
20U	1258 mm
22U	1302 mm
24U	1434 mm
26U	1524 mm

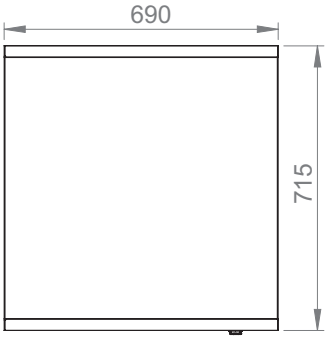

Top view

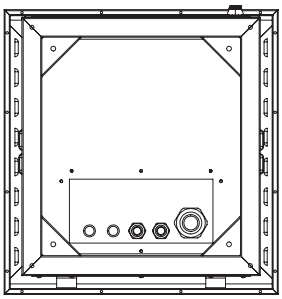

Bottom view

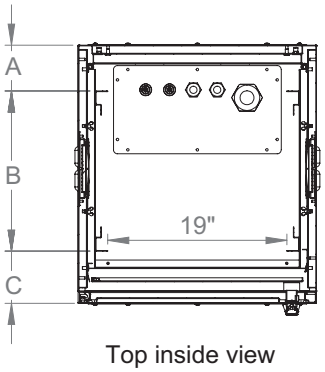

Top inside view

	Min	Max
A	20 mm	145 mm
B	240 mm	490 mm
C	40 mm	165 mm

19” IP65 Outdoor Cabinet

Width: 600 mm
Depth: 650 mm

Additional Conceptual Isometric Views

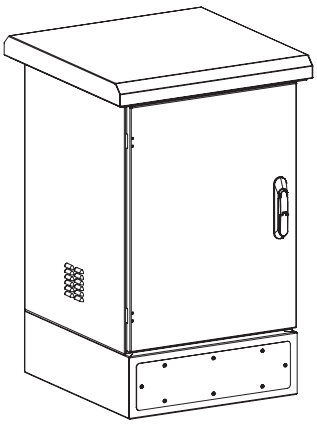

Front door closed isometric view

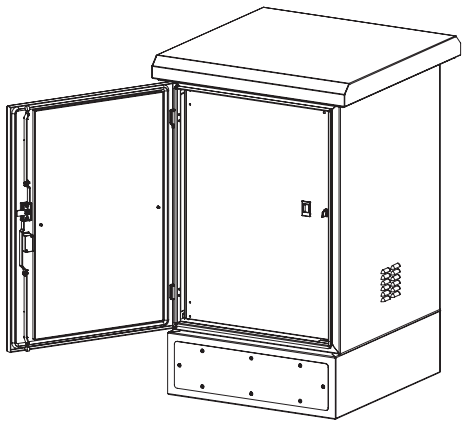

Front door open inner door is closed isometric view

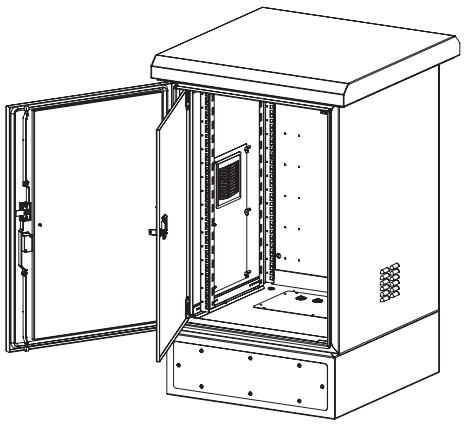

Front door open inner door is open isometric view

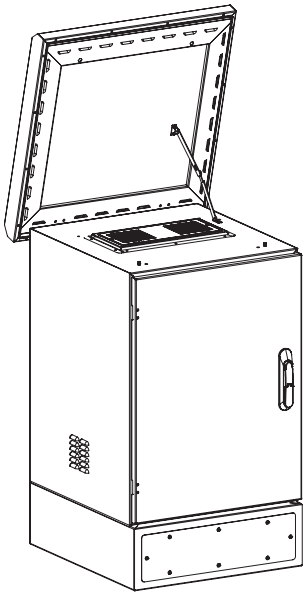

Stopper integrated hinged roof canopy detail

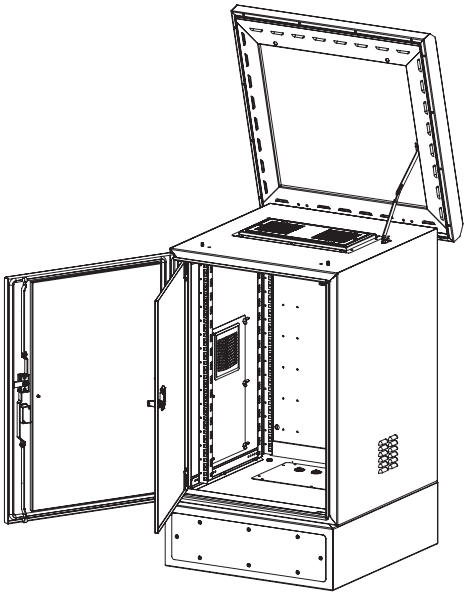

Stopper integrated hinged roof canopy detail front doors are open

19" IP65 Outdoor Cabinet W=600 mm D=650 mm					
Product Number	U Height	H (mm) Cabinet (Included 200 mm Plinth Height)	Width (mm)	Depth (mm)	Net Weight (kg)
LN-OD-09U6065-LG-MTRL	9U	769	600	650	80
LN-OD-12U6065-LG-MTRL	12U	902	600	650	90
LN-OD-16U6065-LG-MTRL	16U	1080	600	650	105
LN-OD-20U6065-LG-MTRL	20U	1258	600	650	120
LN-OD-22U6065-LG-MTRL	22U	1302	600	650	125
LN-OD-24U6065-LG-MTRL	24U	1434	600	650	130
LN-OD-26U6065-LG-MTRL	26U	1524	600	650	135

MTRL is material selection code which customers to indicate while ordering
MTRL: Replace code with Z275 for DX51 D + 275gr/m² hot dip galvanized zinc coating. (No corrosion warranty.)
MTRL: Replace code with A430 for AISI 430 grade stainless steel. (Limited corrosion warranty up to 2-3 years.)
MTRL: Replace code with A304 for AISI 304 grade stainless steel. (Limited corrosion warranty up to 3-5 years.)
MTRL: Replace code with A316 for AISI 316L grade stainless steel. (Corrosion warranty up to 5-10 years.)
LG: Standard Color is RAL 7035 Light Grey which is registered in the part number as LG, if Signal White RAL 9003 is required which has a better performance against UV impact Insulpaint and Antigrafiti option as a Polyurethane finish replace the LG with SW.

19” IP65 Outdoor Cabinet

Width: 600 mm
Depth: 650 mm

Project Design Product Portfolio

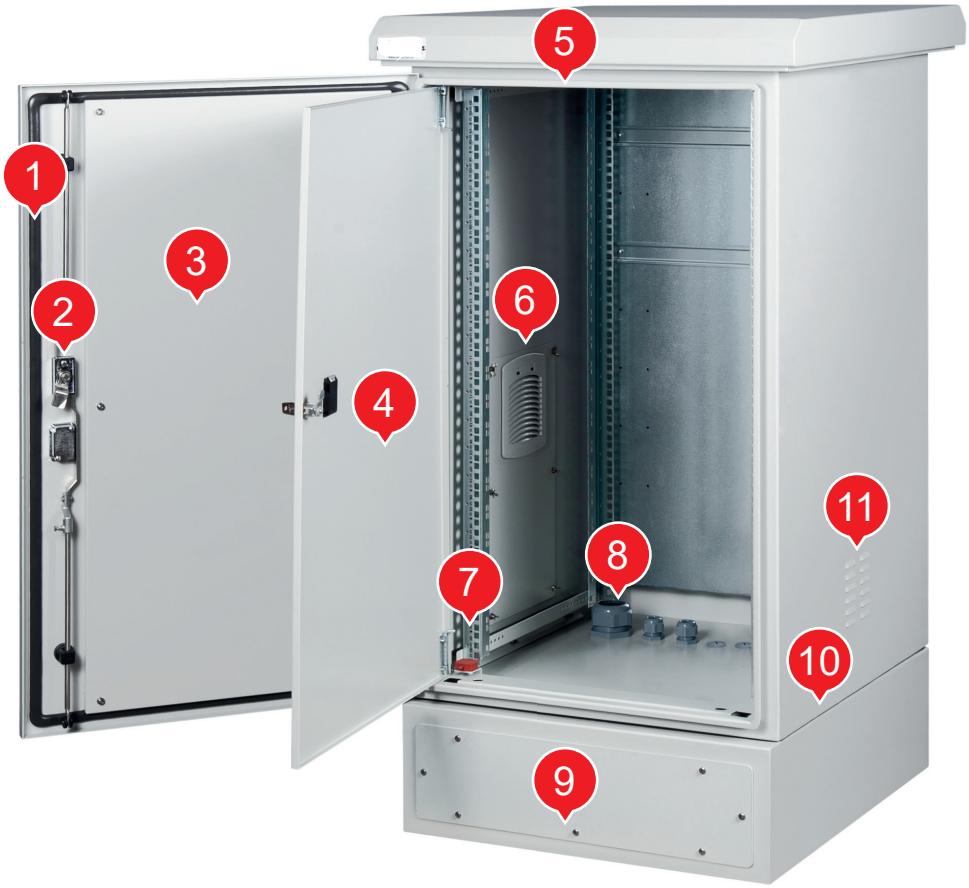

Special Features	
1	Polyurethane infused sealing/gasketing system provides EN 60529 IP65 protection covers indicatively Nema 250 classifications 3, 3S, 4, 4X, 5, 12, 12K, 13
2	Three point locking system rods supporting IP protection class Anti-vandalism tested according to DIN V ENV 1630. WK2 Anti-vandalism tested lock handle DIN V ENV 1630 burglar resistance. Test methods for the determination of resistance to manual burglary attempts. *** 9U height has single point lock.
3/4	Internal layer t:1,00 mm thickness and Inner cover/door t:1,5 mm thickness material varies as per your MTRL selection. Inner cover/door protects the enclosure from wind effects and prevents against dust and provided additional protection if the main door is not locked properly. It has ‘‘O’’ type barrel locking.
5	Open/close function canopy H 70 mm, hiding and securing fan module, helping EN 60529 IP protection, allowing heat dissipation from exhausted hot air through fan kit, hinged , site implementation friendly. This housing may be closed with dummy plate once an air conditioner or heat exchanger unit is integrated on front door. It has integrated hidden hinged mechanism under the roof canopy for maintenance and service period the canopy can stay open during wind effect.
6	Air intake kit, filtered, filter replacement possible with wing nuts toolless operation. Once an air conditioner or heat exchanger is integrated these fresh air inlet panels are sealed with metallic dummy panels.
7	Clear U marked, 19’’ vertical mounting rails, 4 pcs, DC01, 6112, electro galvanize coating.
8	Cable entry gland plate, with PVC or brass cable entry pats, PG sizes, multiple capacity per usage field, customized in standard 1pcs PG32, 4 pcs PG16 cable entry pats.
9	H200 mm plinth for concrete assembly for cable management screwed opening placement in front section.
10	Monoblock welded body for stability and mechanical resistance and special flange system for water and dust ingress designed to form together with polyurethane gasketing system allows EN 60529 IP65 protection.
11	Ventilation louvers for fresh air intake on outer panels and filtered air entry on inner panels are at different height elevation to provide protection against flood or splashing water.

*** Between outer and inner skins there is 10 mm insulation material which protects against the sun radiation impact and thermal effects coming from ambient conditions especially in hot climate countries. EN 12667 at 40 Celsius λ:0,038W/m.K heat transmission co-efficient / E classification for fire EN 13501-1 and water emission level WS01 EN 1609. The lowest heat transmission co-efficient as λ: 0,018W/m.K (15 mm thickness) special insulation can be provided project case application with mutual acceptance by customers.